3D

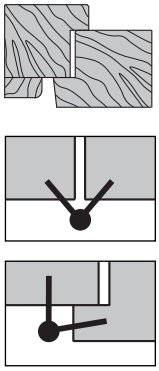

Description

Adjustable hinge made of galvanised steel, 14 and 16 mm in diameter, featuring threaded pins with 1,8 mm pitch, maximum stripping strength. These characteristics make it suitable for fire-stop doors.

Adjustments: three-dimensional adjustment possible (horizontal, vertical and depth) using a single 4 mm Allen wrench. A 3 mm wrench is used only for the vertical adjustment of the 14 mm diameter hinge.

❶ Horizontal adjustment: made by adjusting the threaded pin on the upper body (to hold the sash perfectly plumb).

❷ Depth adjustment: made by adjusting the threaded pin on the lower body (to apply the proper pressure to the gasket).

❸ Vertical adjustment: 4 mm, through the thrust applied by a tapered screw onto the revolving ball set in the mobile pivot.

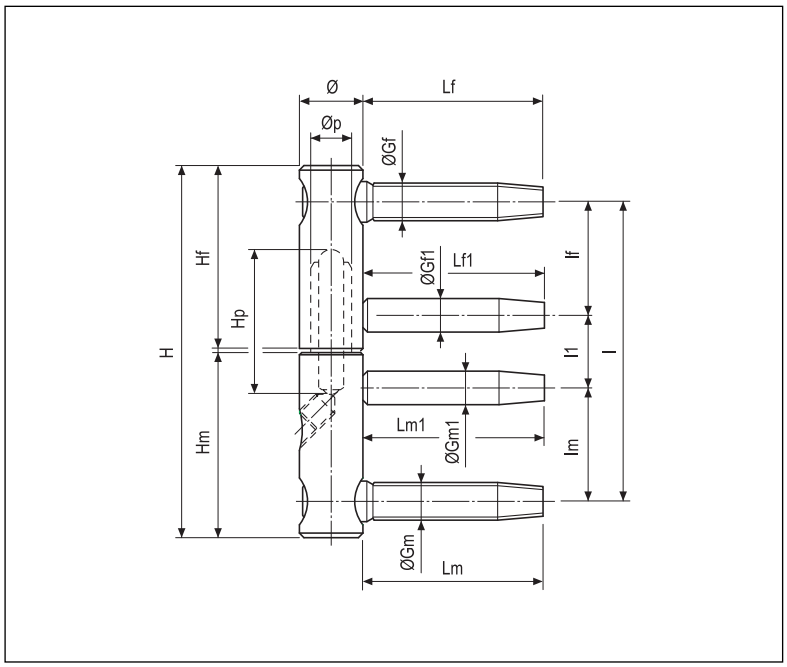

Hinge measurements

Dimension	E01150 - E01165		E01160
	ø14	ø16	ø16
H	82	82	82
I	66	66	66
Hm	41	41	41
Hf	41	41	41
Øp	8,5	10	10
Hp	31	31	31
ØGm	8,3	8,8	8,8
Lm	39,5	48,5	65
ØGf	8,3	8,8	8,8
Lf	39,5	48,5	65
Im / If	25	25	25
I1	16	16	16
ØGm1 / Gf1	7,4	7,7	7,7
Lm1 / Lf1	40	50	65

Order specifications

Material	Article	ø	
STEEL	E01150.14.XX	14	
	E01150.16.XX	16	
	E01160.16.XX	16	65 mm pins
STAINLESS STEEL	E01165.14.XX	14	
	E01165.16.XX	16	

NB. *Refer to the price list in force to check the availability of the finishes.*

Available covers

Standard model	**ABS:** Art. E01151 for ø14 - 16 mm
	ALUMINIUM: Art. E21151 for ø14-16 mm
	BRASS: Art. E01159 for ø14-16 mm
Baroque model	**BRASS:** Art. E01153 for ø14-16 mm

NB. *For complete dimensions and codes, see the "Covers" chapter.*

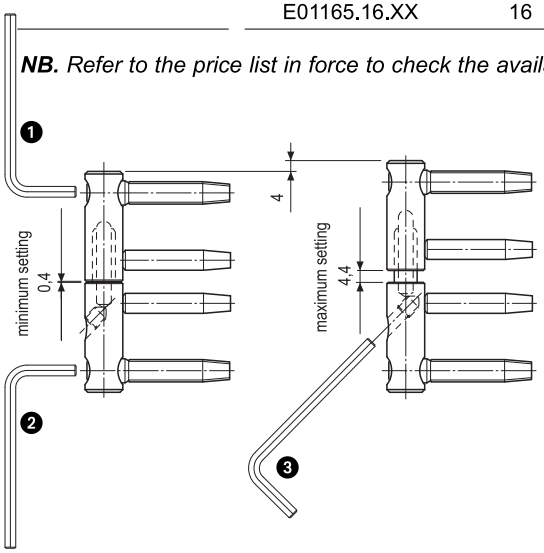

INSTALLATION TOOLS ("Jigs" chapter)

Installation on rebated frame

- Guide tool box article code E00112.16.04
- Guide tool kit article code E00125.16.04
- Single jig article code E00139.16.04
- Jig rod for windows article code E00136.00.09/02
- Jig rod for door-windows article code E00136.00.13/06/21

Installation on flush frame

- Guide tool box article code E00115.16.04
- Guide tool kit article code E00165.16.04
- Single jig article code E00133.16.04
- Jig rod for windows article code E00136.00.11/04
- Jig rod for door windows article code E00136.00.15/08/23